Rouge Lighting

ELM60S12DC Class 2 Magnetic Dimmable

Outdoor Black Powder Coated Steel Enclosure
Single Circuit: 12VDC
Total Wattage: 60W max
Input Voltage: 120V 60Hz

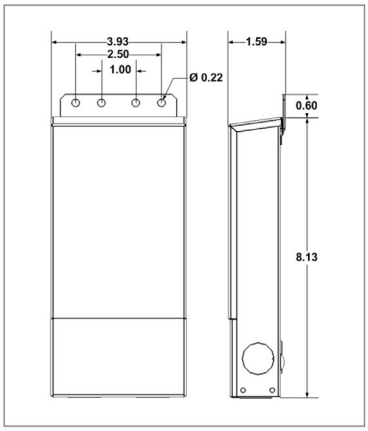

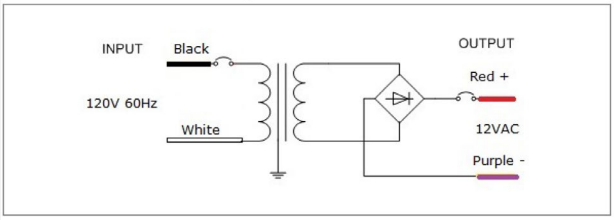

Transformer
Dimmable with any LV magnetic dimmer as long as you cover dimmer's min load.
Temperature class B(130°C)
Input leads are 18AWG 600V
Output leads are 18AWG 300V
Leads max. operational temperature is 105°C
Thermal self reset primary breaker 1.25A
Thermal self reset secondary breaker 5A

Housing
The actual transformer 60W is encapsulated in the enclosure
The enclosure is Black Powder Coated Steel, NEMA 3R rated
Wiring compartment has 5 knockouts sizes for 3/8 inch screw cable connectors
Enclosure Temperature does not exceed 75°C at 45°C ambient and fully loaded
Dimensions (inch): H = 8.13, W = 3.93, D = 1.59
Weight (LBs): 4

Electrical Parameters
Input Voltage: 120V 60Hz
Max. input current at full load: 0.6A
Output voltage without load: 13.5VDC
Output voltage fully loaded: 11.5VDC
Max. Total Wattage: 60W
Max. Output Current: 5A
Efficiency: 85%

© 2015 ELRAM, Inc. Elram, Inc. holds the right to change the design of our products at any time.