Rouge Lighting

CATALOG #			
PROJECT NAME		TYPE	

R590S9

5” LED Slope Smooth Retrofit Kit

PRODUCT DESCRIPTION

This product is 5" LED Slope Smooth Retrofit kit. It is compatible with most 5" recessed standard housings. Ideal for both remodel or new construction applications. The retrofit kit comes with a disconnect screw-in base lead for easy installation into standard incandescent sockets.

PRODUCT SPECIFICATIONS

- White painted Diecast heat sink is appropriate for heat dissipation.
- Oversized trim ring constructed from one-piece diecast.
- Torsion spring mounting style are designed to accommodate most 5" standard and shallow housings.
- E26 medium screw-base Edison connector provides easy retrofit of incandescent housings.
  (GU10 and GU24 socket adaptor available - sold separately)

LED LIGHT ENGINE

- Protected LED driver performs at 120V (120-277V available).
- Dimming down to 10% with most dimmers (at 120V only).
- CCT 2700K, 3000K, 4000K, 5000K available
- CRI ≥90
- Long life LED chips guaranteed up to 50,000 hours.

WARRANTY

Guaranteed five years from the purchase date of the product, against mechanical defects in manufacturing.

LISTINGS

- cULus classified
- Energy star qualified
- Title 24 compliant
- Damp locations
- RoHS compliances
- Tested in accordance with IESNA LM79 & LM80

PRODUCT DESCRIPTION

Rouge Lighting **R590S9** is 5" LED Slope Smooth Retrofit kit. It is compatible with most 5" recessed standard housings. Ideal for both remodel or new construction applications. The retrofit kit comes with a disconnect screw-in base lead for easy installation into standard incandescent sockets.

DIMENSIONS

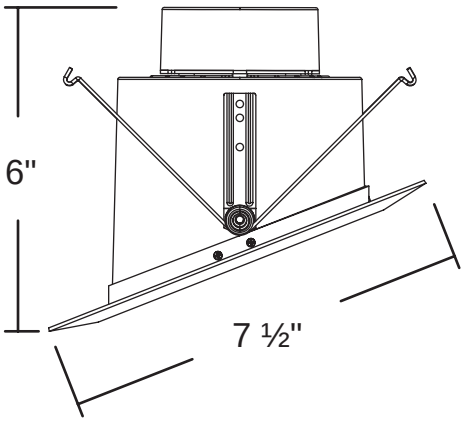

PERFORMANCE DATA

	3000K
Input Voltage	120V
Input Power	17W
Frequency	50 / 60Hz
Operation temp	-30℃~40℃ (-22℉~104℉)
Lumens	1070
CRI	≥ 90

R590S9	30	WH
TRIMS	CCT	FINISH
R590S9 5" Slope Smooth Retrofit	**27** 2700K (1040lm) **30** 3000K (1070lm)	**BK** BLACK **WH** WHITE

ELRAM, INC • T: 323-46-ELRAM (35726) • Fax: 323-628-1700 • elramusa.com • info@elramusa.com

© 2018 ELRAM, Inc. Elram, Inc. holds the right to change the design of our products at any time.