Rouge Lighting

CATALOG #			
PROJECT NAME		TYPE	

R6FP9

6" Round Flat Panel LED

PRODUCT DESCRIPTION

The Rouge Lighting **R6FP9** is a 6" LED Round Flat Panel Light, It consists of one trim of die-cast body and J-Box with driver. No housing is needed and installation is easy and fast.

DIMENSIONS

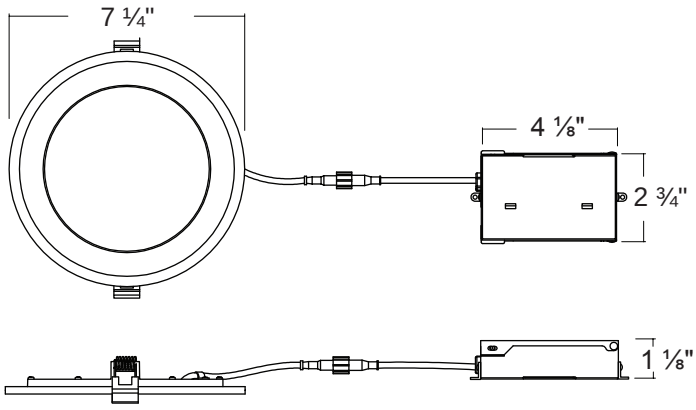

PRODUCT SPECIFICATIONS

- White painted Diecast body is appropriate for heat dissipation.
- 2 Plastic clips pre-installed on unit for easy installation.
- One light J - Box

LED LIGHT ENGINE

- Protected LED driver performs at 120V (120-277V available).
- Dimming down to 10% with most dimmers (at 120V only).CCT
- 2700K, 3000K, 4000K, 5000K available
- CRI ≥90
- Long life LED chips guaranteed up to 50,000hours.

WARRANTY

- Guaranteed five years from the purchase date of the product, against mechanical defects in manufacturing.

LISTINGS

- cULus Listed
- Energy star qualified
- Wet locations (Not suitable for coastal/salt water area)
- Damp locations
- RoHS compliances
- Tested in accordance with IESNA LM79 & LM80

PERFORMANCE DATA

	3K
Input Voltage	120V
Input Power	15W
Frequency	50 / 60Hz
Operation temp	-30℃~40℃ (-22°F~104°F)
Lumens	1090
CRI	≥ 90

R6FP9	30	WH
TRIMS	**CCT**	**FINISH**
R6FP9 6" LED Round Flat Panel	**27** 2700K (1040lm) **30** 3000K (1090lm)	**BK** BLACK **WH** WHITE

ELRAM, INC • **T: 323-46-ELRAM** (35726) • **Fax: 323-628-1700** • **elramusa.com** • **info@elramusa.com**

© 2018 ELRAM, Inc. Elram, Inc. holds the right to change the design of our products at any time.